Hi-MO X10 Guardian

Light Design

Preliminary

LR7-60HVHL

535~560M

- Adapted for C& I Rooftops with Low Load-Bearing Capacity
- Lighter Weight: Over 32% weight reduction.
- Higher Power Generation: HPBC 2.0 high-efficiency technology.
- Enhanced Reliability: High mechanical loading.
- Faster Installation: No roof reinforcement required.

15 15-year Warranty for Materials and Processing

30 30-year Warranty for Extra Linear Power Output

Complete System and Product Certifications

IEC 61215, IEC 61730

ISO9001: 2015: ISO Quality Management System

ISO14001: 2015: ISO Environment Management System

ISO45001: 2018: Occupational Health and Safety

IEC62941: Guideline for module design qualification and type approval

LONGi

Hi-MO X10 Guardian Light Design Preliminary

LR7-60HVHL 535~560M

24.8%	0~3%	<1%	0.35%	BC-CELL
MAX MODULE EFFICIENCY	POWER TOLERANCE	FIRST YEAR POWER DEGRADATION	YEAR 2-30 POWER DEGRADATION	LOWER OPERATING TEMPERATURE

Additional Value

30-Year Power Warranty

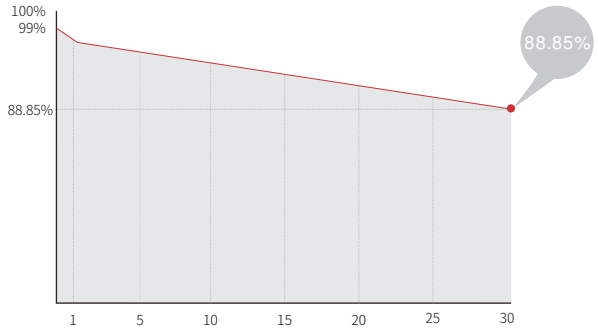

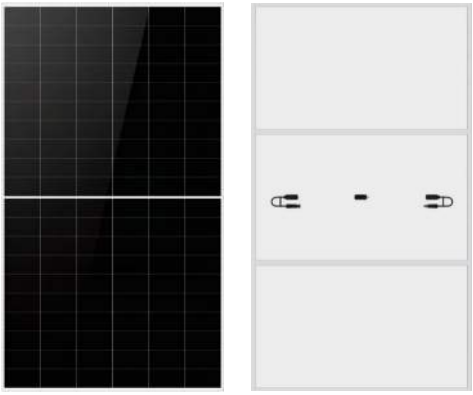

Mechanical Parameters

Cell Orientation	120 (6×20)
Junction Box	IP68，three diodes
Output Cable	4mm² +400/-200mm/±1400mm length can be customized
Glass	Single glass, 1.6mm coated semi-tempered glass
Frame	Anodized aluminum alloy frame
Weight	16.3±3% kg
Dimension	1990×1134×30mm
Packaging	36pcs per pallet / 180pcs per 20’ GP / 792pcs per 40’ HC

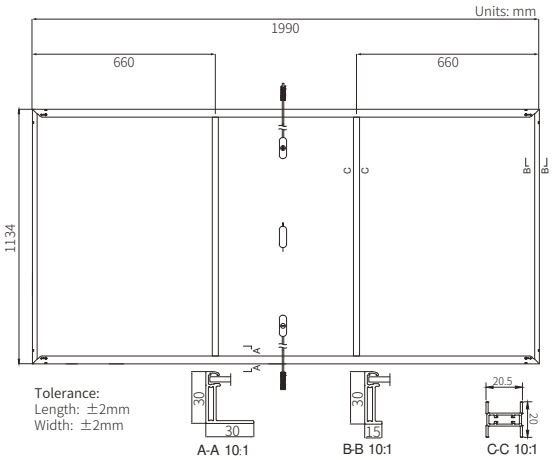

Electrical Characteristics

STC : AM1.5 1000W/m² 25°C NOCT : AM1.5 800W/m² 20°C 1m/s Test uncertainty for Pmax: ±3%

Module Type	LR7-60HVHL-535M		LR7-60HVHL-540M		LR7-60HVHL-545M		LR7-60HVHL-550M		LR7-60HVHL-555M		LR7-60HVHL-560M	
Testing Condition	STC	NOCT	STC	NOCT	STC	NOCT	STC	NOCT	STC	NOCT	STC	NOCT
Maximum Power (Pmax/W)	535	407	540	411	545	415	550	419	555	422	560	426
Open Circuit Voltage (Voc/V)	44.78	42.57	44.88	42.66	44.98	42.76	45.08	42.85	45.18	42.95	45.28	43.04
Short Circuit Current (Isc/A)	15.15	12.17	15.25	12.25	15.35	12.33	15.45	12.41	15.55	12.49	15.65	12.57
Voltage at Maximum Power (Vmp/V)	37.01	35.16	37.11	35.26	37.21	35.35	37.31	35.45	37.41	35.54	37.51	35.64
Current at Maximum Power (Imp/A)	14.46	11.58	14.55	11.66	14.65	11.73	14.74	11.81	14.84	11.89	14.93	11.96
Module Efficiency(%)	23.7		23.9		24.2		24.4		24.6		24.8	

Operating Parameters

Operational Temperature	-40°C ~ +85°C
Power Output Tolerance	0 ~ 3%
Maximum System Voltage	DC1500V (IEC)
Maximum Series Fuse Rating	25A
Nominal Operating Cell Temperature	45±2°C
Protection Class	Class II
Fire Rating	IEC Class C

Mechanical Loading

Front Side Maximum Static Loading	3600Pa
Rear Side Maximum Static Loading	2400Pa
Hailstone Test	25mm Hailstone at the speed of 23m/s

Temperature Ratings (STC)

Temperature Coefficient of Isc	+0.050%/°C
Temperature Coefficient of Voc	-0.200%/°C
Temperature Coefficient of Pmax	-0.260%/°C

LONGi

Specifications included in this datasheet are subject to change without notice.
LONGi reserves the right of final interpretation. (20250625 BGV02)